Strain Wave Gear KSB-HO Series Simplicity Box
Hollow shaft open flexspline

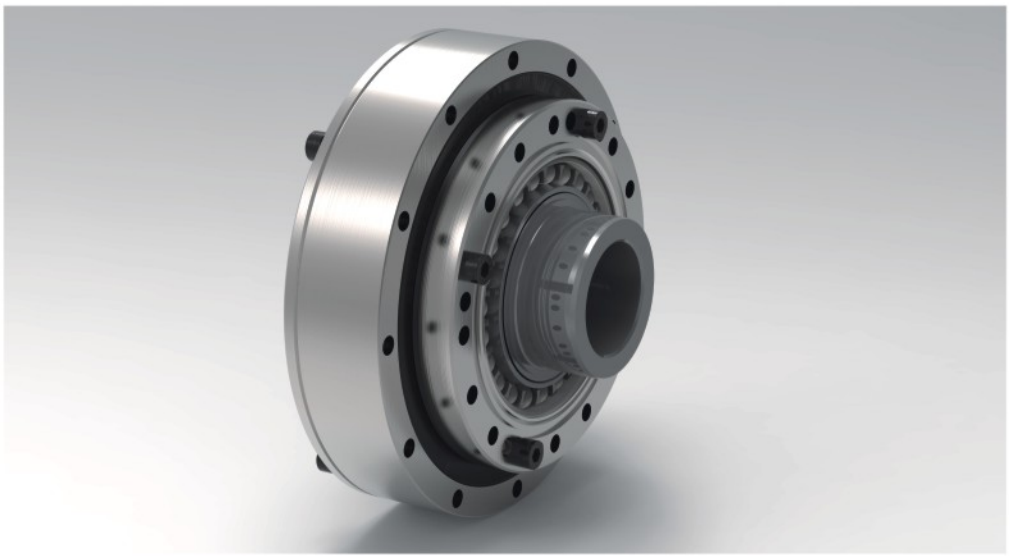

Advantages

- High positioning and rotational accuracy
- High repeatability accuracy
- High torque
- Super compact design
- Backlash free
- Long service life
- High torsional stiffness
- High efficiency
- Simple installation
- Flexible for application design

Main Applications

- Robots
- High Precision Tooling Machine
- High Precision Testing Equipment
- Medical Equipment
- Optical Equipment
- Analytical and Testing Equipment
- Semiconductor Manufacturing Systems
- Packing Machines

Ordering Code

Gear Series	Transmission Type	Gear Size	Ratios					Special Design
KSB	HO	14	50	80	100			as per customers' special requirements
		17	50	80	100	120		
		20	50	80	100	120	160	
		25	50	80	100	120	160	
		32	50	80	100	120	160	
		40	50	80	100	120	160	
Ordering Code								
KSB-HO		– 25	–		100		–	SP

Technical Specifications

Series	Size	Ratio	Max Output Torque	Average Output Torque	Rated Output Toruqe at rated speed 2000 rpm	Emergency Stop Torque	Max Input Speed	Average Input Speed	Moment of Inertia	Weight
			Nm	Nm	Nm	Nm	rpm	rpm	kgm^2	kg
KSB-HO	14	50	18	6,9	5,4	35	8500	3500	$0.18x10^{-4}$	0.41
		80	23	11	7,8	47				
		100	28	11	7,8	54				
	17	50	34	26	16	70	7300	3500	$0.34x10^{-4}$	0.59
		80	43	27	22	87				
		100	54	39	24	110				
		120	54	39	24	86				
	20	50	56	34	25	98	6500	3500	$0.58x10^{-4}$	0.83
		80	74	47	34	127				
		100	82	49	40	147				
		120	87	49	40	147				
		160	92	49	40	147				
	25	50	98	55	39	186	5600	3500	$1.23x10^{-4}$	1.39
		80	137	87	63	255				
		100	157	108	67	284				
		120	167	108	67	304				
		160	176	108	67	314				
	32	50	216	108	76	382	4800	3500	$3.66x10^{-4}$	2.87
		80	304	167	118	568				
		100	333	216	137	647				
		120	353	216	137	686				
		160	372	216	137	686				
	40	50	402	196	137	686	4000	3000	$9.28x10^{-4}$	5.35
		80	519	284	206	980				
		100	568	372	265	1080				
		120	617	451	294	1180				
		160	647	451	294	1180				

Gear Dimensions

Simplicity Box KSB-HO-14

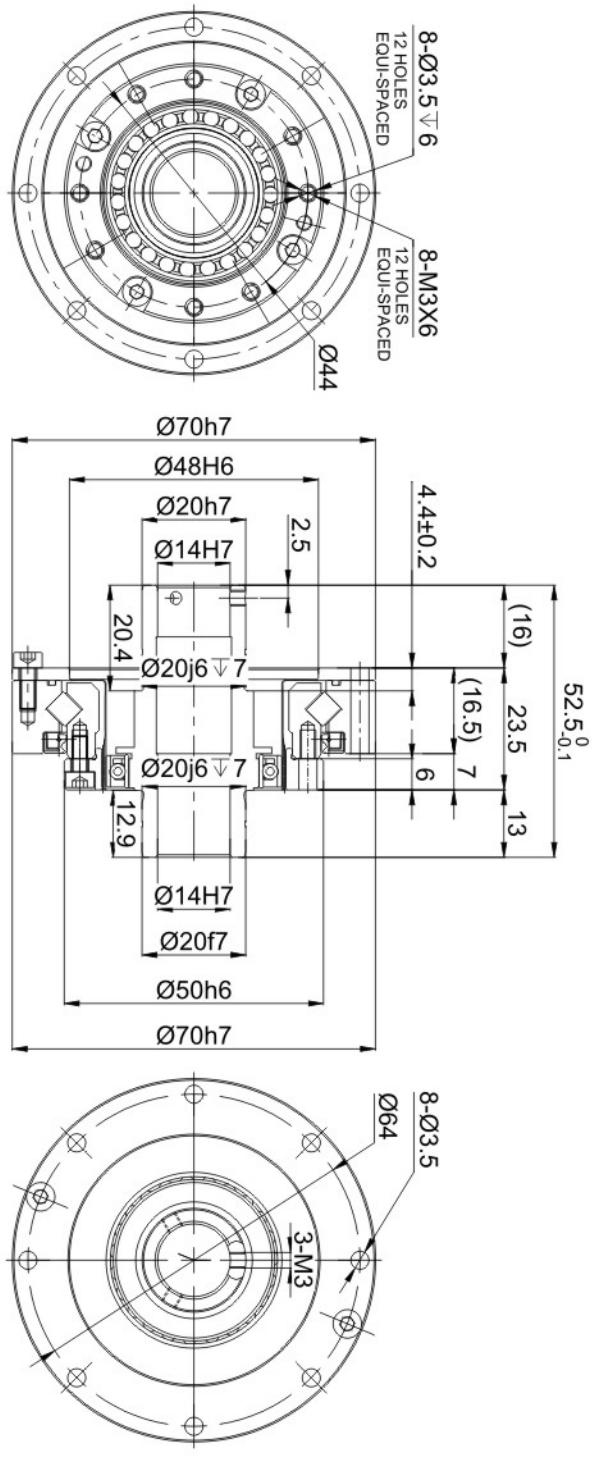

Simplicity Box KSB-HO-17

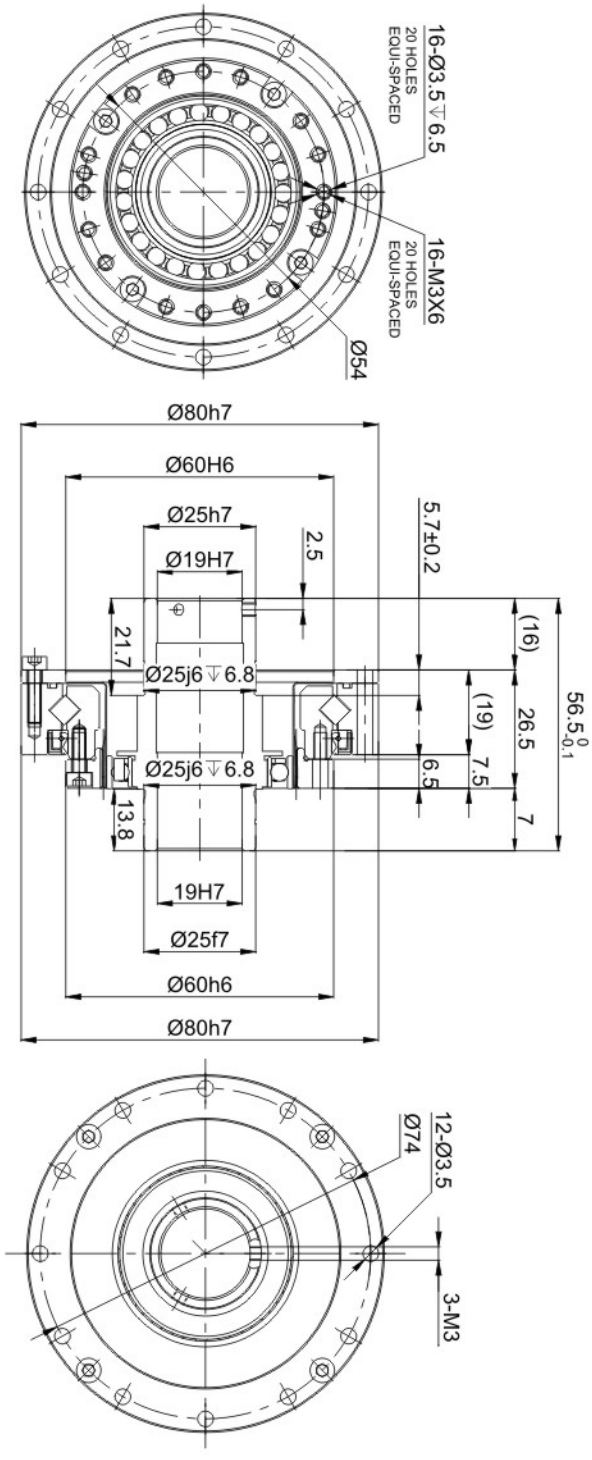

Gear Dimensions

Simplicity Box KSB-HO-20

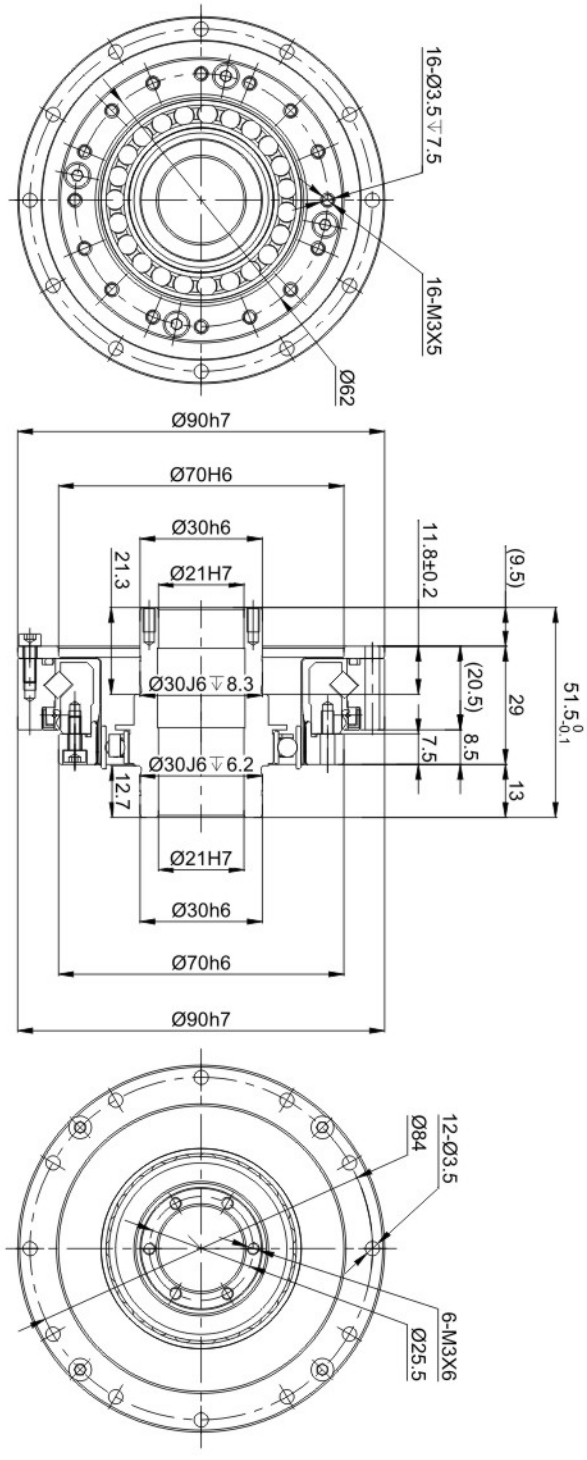

Simplicity Box KSB-HO-25

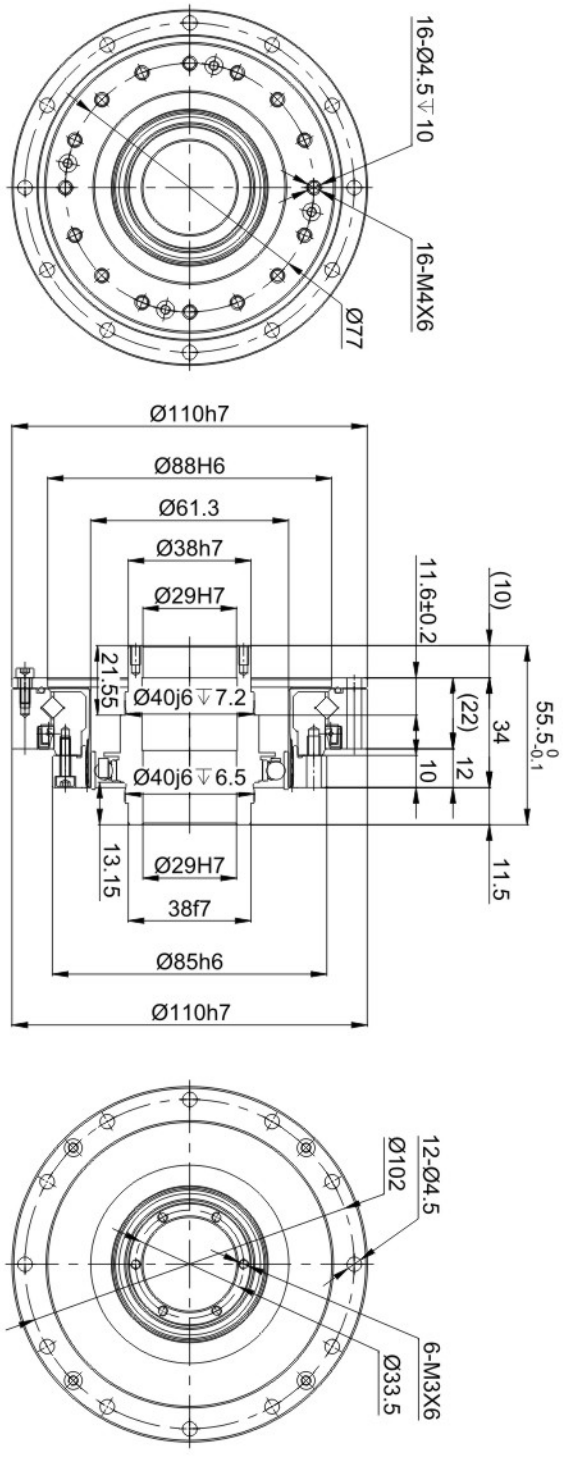

Gear Dimensions

Simplicity Box KSB-HO-32

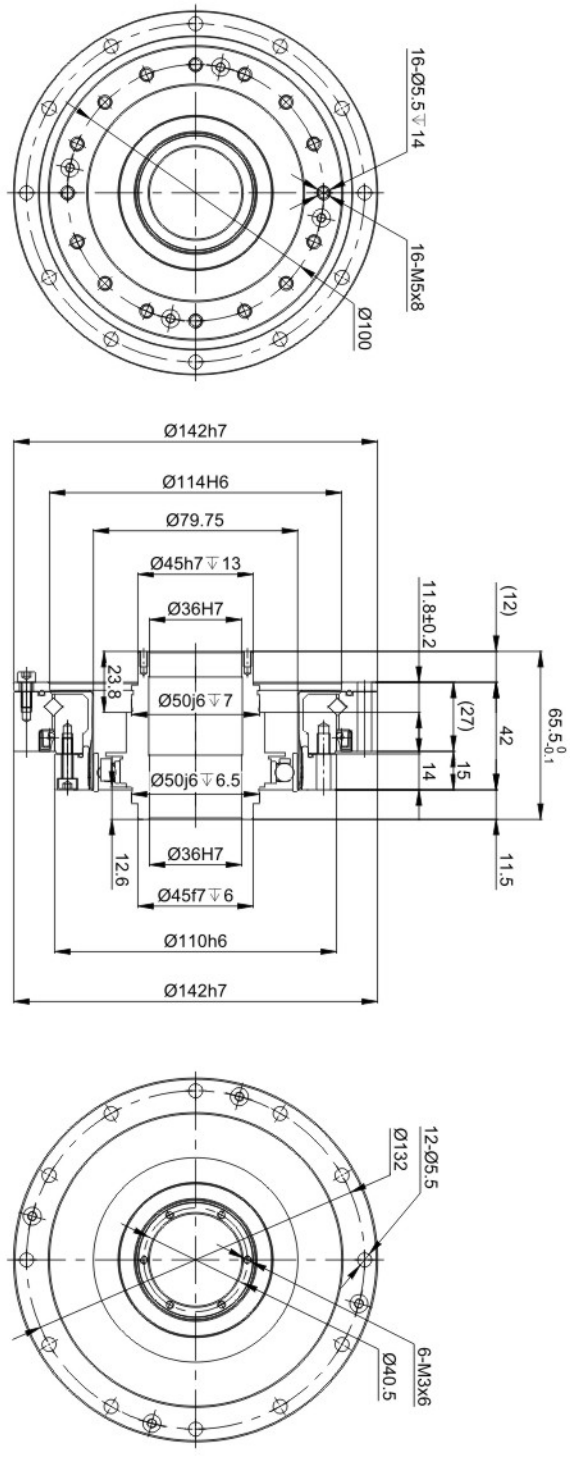

Simplicity Box KSB-HO-40

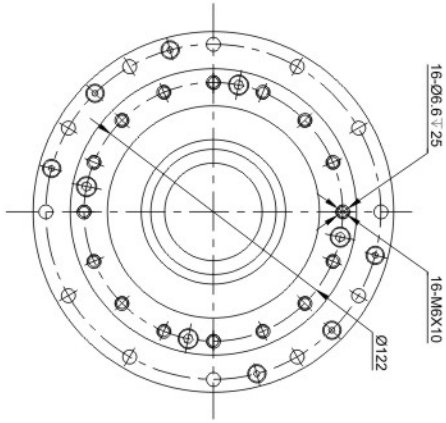

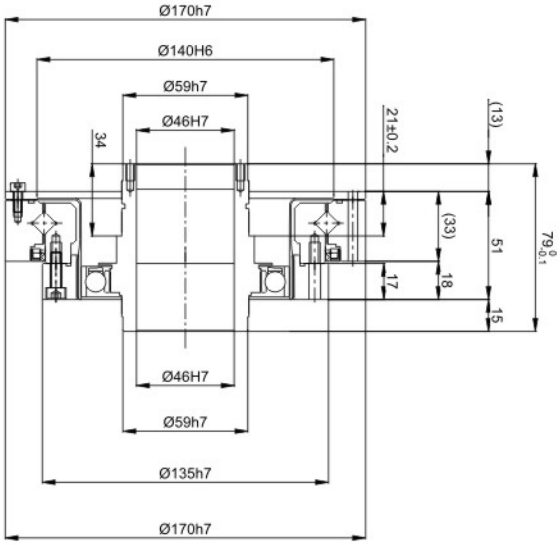

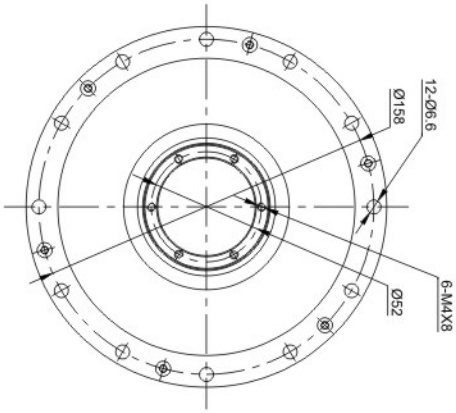

Technical Memo

Technical Memo